Current part is item (81) on diagram. Available at www.oshkoshequipment.com

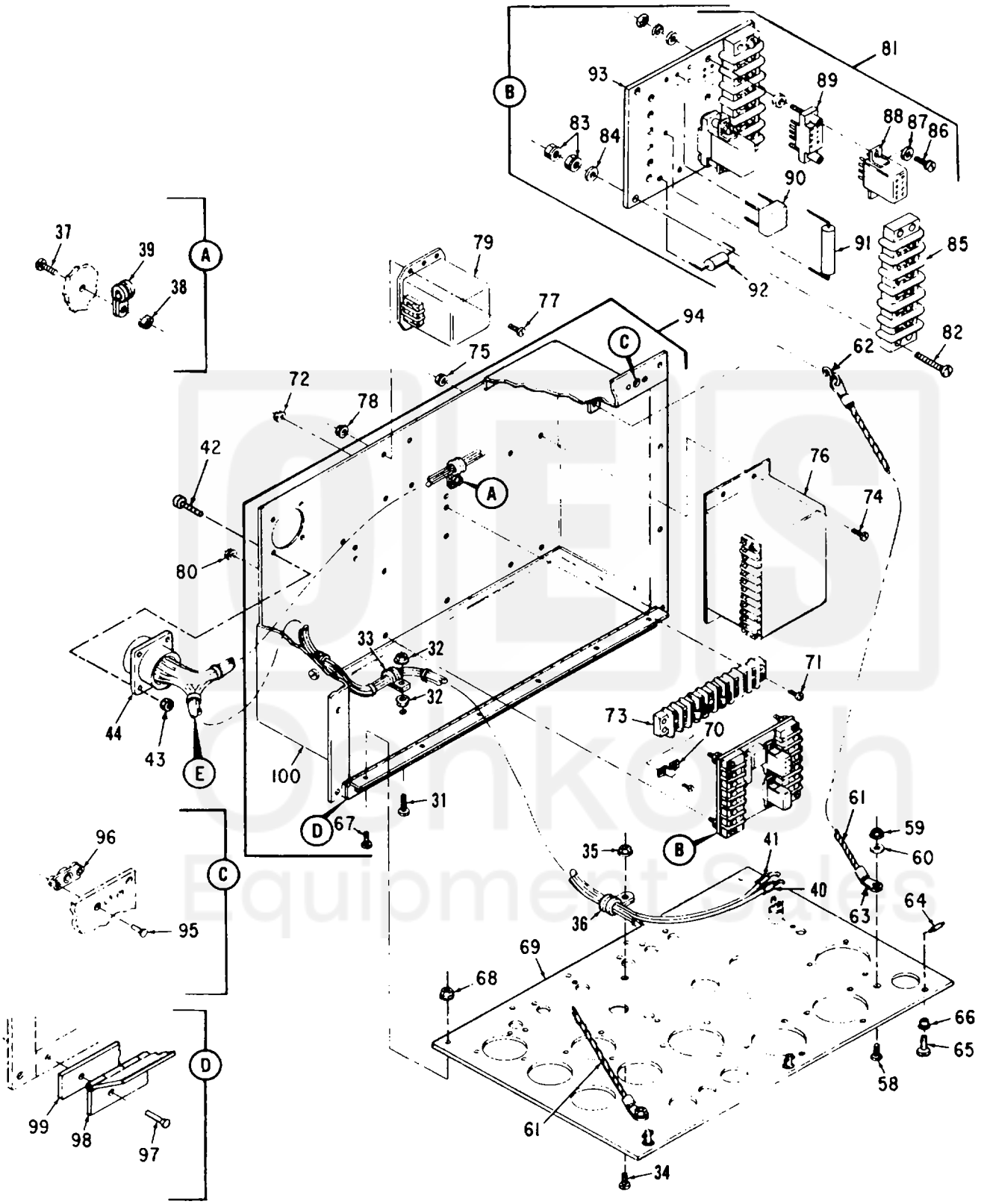

Figure 11. Control Cubicle Assembly (Sheet 2 of 3)

Current part is item (81) on diagram. Available at www.oshkoshequipment.com

Current part is item (81) on diagram. Available at www.oshkoshequipment.com

(1) ILLUSTRATION a FIG NO.	(1) ILLUSTRATION b ITEM NO.	(2) SMR CODE a ARMY	(2) SMR CODE b AIR FORCE	(2) SMR CODE c NAVY	(2) SMR CODE d USMC	(3) USMC a SSI	(3) USMC b REPL FACTOR	(4) NATIONAL STOCK NUMBER	(5) DESCRIPTION REF NUMBER & MFR CODE	USABLE ON CODE	(6) U/M	(7) QTY INC IN UNIT	(8) USMC QTY PER EQUIP
									CONTROL CUBICLE ASSEMBLY, A3				
11	78	PAFZZ	PAFZZ	PAHZZ	PAFZZ	D	.008	5310-00-052-3632	NUT AND WASHER ASSY 511-081800-00 69-561-3	 78189 30554	EA	4	78
11	79	XAFZZ	XAFZZ	XAHZZ	XA---				TRANSDUCER, A2, PART OF SET FSN 6625-003-0971 04306-3003-02 69-578	 93568 30554	EA	1	1
11	80	PAOZZ	PAFZZ	PAHZZ	PAFZZ	D	.008	5310-00-094-3421	NUT AND WASHER ASSY 511-101800-00 69-561-4	 78189 30554	EA	4	160
11	81	PAFFF	PAFFF	PAHHH	PAFFF	I	.500	6110-00-202-2888	RELAY ASSY, A3A4 04306-0210 69-765 CONSISTING OF	 93568 30554	EA	1	1
11	82	PAFZZ	PAFZZ	PAHZZ	PAFZZ	D	.008	5305-00-984-6215	SCREW MS35206-268	 96906	EA	4	4
11	83	PAFZZ	PAFZZ	PAHZZ	PAFZZ	D	.008	5310-00-094-3421	NUT AND WASHER ASSY 511-101800-00 69-561-4	 78189 30554	EA	8	160
11	84	PAFZZ	PAFZZ	PAHZZ	PAFZZ	D	.010	5310-00-809-8546	WASHER MS27183-8	 96906	EA	4	18
11	85	PAFZZ	XBFZZ	XBHZZ	XB---			5940-00-088-6357	BOARD, TERMINAL 42TB6	 81349	EA	2	2
11	86	PAFZZ	XBFZZ	PAHZZ	PAFZZ	D	.008	5305-00-984-4982	SCREW MS35206-225	 96906	EA	4	14
11	87	PAOZZ	PAFZZ	PAHZZ	PAFZZ	D	.010	5310-00-045-4007	WASHER MS35338-41	 96906	EA	4	39
11	88	PAFZZ	PAFZZ	PAHZZ	PAFZZ	D	.050	5945-00-435-1833	RELAY, A3A4K1, A3A4K6 M5757-23-003	 81349	EA	2	15
11	89	PAFZZ	PAFZZ	XBHZZ	PAFZZ	I	.050	5935-00-103-5359	SOCKET, RELAY VB8-1UA11-80000-P300-1147 69-658	 05574 30554	EA	2	6
11	90	PAFZZ	PAFZZ	PAHZZ	PAFZZ	I	.020	5961-00-135-6168	RECTIFIER, BRIDGE, SILICONE, A3A4CR1 69-739 VS448	 30554 83003	EA	1	2
11	91	PAFZZ	PAFZZ	PAHZZ	PAFZZ	I	.040	5905-00-357-3093	RESISTOR, FIXED, WIREWOUND, 1.5K OHMS 11W, A3A4R10 RWR78S1501FR	 81349	EA	1	2
11	92	PAFZZ	PAF-Z	PAHZZ	PAFZZ	I	.050	5910-00-579-5183	CAPACITOR, FIXED, A3A4C2 10 UF, 50 WVDC, +50, -151 M39006-02-1240	 81349	EA	1	1
11	93	XAFZZ	XAFBZ	XAHZZ	XB---				BOARD 04306-0238 69-764	 93568 30554	EA	1	1
11	94	XBHZZ	XBFBZ	XBHZZ	XB---				BOX, CONTROL 04306-0201 69-591 CONSISTING OF	 93568 30554	EA	1	1
11	95	PAFZZ	XBFZZ	XBHZZ	XB---			5320-00-241-6020	RIVET MS20427-4C4	 96906	EA	6	6

Current part is item (81) on diagram. Available at www.oshkoshequipment.com